ESM-350

High Voltage DC Contactor

REAL PRODUCT IMAGE

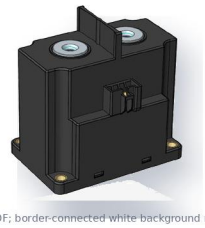

Image extracted from source PDF; border-connected white background removed where applicable.

KEY RATINGS

RATED LOAD **350 A**	MAX SWITCHING VOLTAGE **1500 VDC**
CONTACT FORM **1 Form A**	LOAD OUTLET **Internal Thread**
OPERATE TIME **<=40**	WEIGHT **1080 g**

PRODUCT FEATURES

- Ceramic Brazing seal,No arc leakage,Make sure no fire an burst
- The mixed gas mainly filled with hydrogen can prevent the contact from oxidation and...
- The insulation resistance reaches 1000MΩ(1500VDC) and meets the requirements of...
- Compact structure,low noise
- 350A 85℃ long time current carrying capacity

CONTACT / LOAD DATA

Contact Form	**1 Form A**
Contact Rated Load	**350 A**
Max Switching Voltage	**1500 VDC**
Max Breaking Current	**2000A(1000V DC) 1 times**
Current Tolerance	**500A: 10min;1500A: 15s;4000A: 3s**
Contact Resistance	**<10**
Mechanical Durability	**3×105**

RELAY PERFORMANCE

Operating Time	**<=40**
Release Time	**<=15**
Insulation Resistance	**1000 (1500VDC)**
Open Contact Dielectric	**4000VAC 50 Hz/60 Hz**
Contact/Coil Dielectric	**4000VAC 50 Hz/60 Hz**
Electrical Endurance	**150A 1500VDC (Break)**

COIL OPTIONS

12V DC	**range ±20%Us; pickup 9.6Vmax; dropout 12Vmin...**
24V DC	**range ±20%Us; pickup 19Vmax; dropout 2.4min; pow...**
(10-32)V DC	**range ±10%Us; pickup 9Vmax; dropout 4Vmin; power...**
(36-66)V DC	**range ±10%Us; pickup 32 Vmax; dropout 12Vmin...**

ENVIRONMENT / AUX / MECHANICAL

Auxiliary Contact	**NO**
Aux Rated Load	**2A/30VDC, 3A/125VAC**
Operating Temperature	**-40-+85**
Humidity	**5%-85%RH**
Vibration	**10Hz-500Hz 49 m/s2**
Impact Stability	**196m/s2**
Impact Strength	**490 m/s2**

MECHANICAL OUTLINE / DIMENSIONS

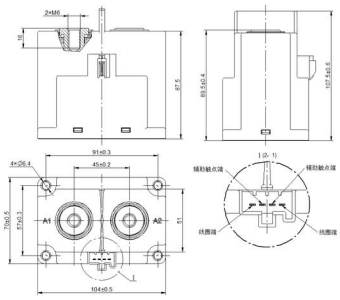

MOUNTING / WIRING DIAGRAM

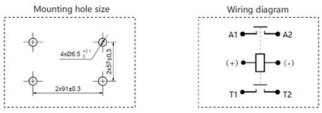

TOLERANCE / PERFORMANCE CURVE

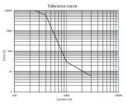

ORDERING & SOURCE TRACEABILITY

ES M-350 A/1500 -12 - F 4 (XXX)

Source PDF: High Voltage DC Contactor ESM-350 Series.pdf

Technical values and diagrams are extracted from source PDF. Verify final order code and optional features with engineering before mass production or quotation.